L 37653-65

ACCESSION NR: AR5008606

of frequencies the circuit includes a RC frequency divider of the integral type; the signal from this divider is used to control the regulating device. The total error of the apparatus is 7%. When an oscillating frequency generator is used the process of determining the characteristics can be fully automated. If the internal generator of a frequency characteristic spectrum analyzer is used as an oscillating frequency generator by feeding a signal from the converter to the input of the analyzer, it is possible to observe the entire amplitude-frequency characteristic of the converter on the screen of a cathode-ray tube. M. Mekler.

SUB CODE: EC, ES ENCL: 00

Card 2/2

L 30354-66 EWT(1) GD

ACC NR: AT6008320 SOURCE CODE: UR/0000/65/000/000/0168/0171

AUTHOR: Gronskiy, Ya. I. (L'vov); Kramarenko, B.K. (L'vov); Kreyn, Ye. D. (L'vov)

ORG: none

TITLE: The suppression of pulsed perturbations by means of a subtraction circuit

SOURCE: AN UkrSSR. Elementy sistem otbora i peredachi informatsii (Elements of systems for selecting and transferring information). Kiev, Naukova dumka. 1965, 168-171

TOPIC TAGS: signal noise separation, logic circuit, signal interference, electronic circuit, circuit design

ABSTRACT: Various band, blocking, and other filters made of LC or RC elements for the separation of the useful signal from a background of strong harmonic noise can be utilized with success only if the perturbation has a continuous character. The author gives a description of difficulties encountered with pulsed perturbations, and presents a brief description of the design and operation of the circuit, shown in Fig. 1, capable of separating out brief signals from the background of pulsed perturbations exceeding the useful signal by 70 to 80 dB. The use of a subtraction circuit in conjunction with a low Q-factor RC filter results in a quality signal filtration in the presence of sharp radiopulse perturbations. Orig. art. has: 2 formulas and 1 figure.

Card 1/2

L 30354-66

ACC NR: AT6008320

In

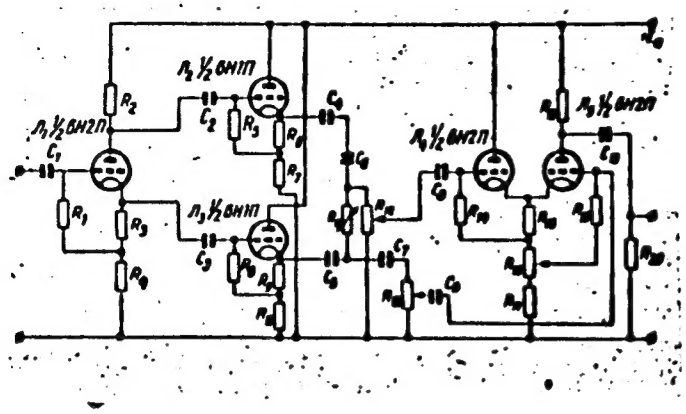

Out

Fig. 1. A subraction circuit separating out useful signals from a pulsed background noise

SUB CODE: 09/ SUBM DATE: 06Nov65/ ORIG REF: 002

Card 2/2

GRONSKY, L.

Occupational diseases in women. Prakt. lek., Praha 31 no. 4:88-90 20 Feb 1951. (CIML 22:3)

1. Of the Obstetric-Gynecological Clinic (Docent V. Vasek, M. D.).

GRONSKY, L.

Screening for cancer of the female genitalia. Cesk. gyn. 18 no.5:473-474 Oct 1953. (CIML 25:4)

GRONSKY, Latan, Dr (Olomouc, Polska 48)

Use of dolsin in obstetrics. Lek. listy, Brno 9 no.18:428-429 15 Sept 54.

(MEPERIDINE, anesthesia and analgesia, in labor)

(LABOR, anesthesia and analgesia, meperidine)

LOYKA, Svat., KUDr.; GRONSKY, J., MUDr.

Cavernous angioma of the cerebellum as cause of sudden death during pregnancy. Cesk. gyn. 21 no.5:351-352 Sept 56.

1. Ustav pro soudni lekarstvi PU v Olomouci, prednosta doc. MUDr. A. Rozmaric.

(ANGIOMA, in pregnancy
cerebellum, cavernous, causing sudden death (Cz))
(PREGNANCY, complications
cavernous angioma of cerebellum, causing sudden death (Cz))
(CEREBELLUM, neoplasms
angioma, cavernous, in pregn., causing sudden death (Cz))
(DEATH, SUDDEN, in pregnancy
caused by cavernous angioma of cerebellum (Cz))

[redacted]SKY, L. Mudr.

Analysis of perinatal mortality in the Olomouc region from 1954-1956. Cesk. zdravot. 6 no.5:230-235 May 58.

1. Krajsky ustav narodniho zdravi v Olomouci.
(INFANT MORTALITY
perinatal, in Czech (Cz))

GRONSKY, L., MUDr.

Campaign against working disability of women. Cesk. zdravot. 6 no.11: 664-666 Nov 58.

1. Prehledy a rozbor z Olomouckeho kraje za rok 1957.
(INDUSTRIAL HYGIENE
campaign against working disability of women in Czech. (Cz))
(GYNECOLOGICAL DISEASES, prev. & control
same)

GRONSKY, Lotar (Olomouc)

Hygienic area as a measure for the improvement of care for working women. Pracovni lek. 11 no.1-2:112 Feb 59.
(INDUSTRIAL HYGIENE,
rest areas for women (Cz))

FROM, A.A.; GRONVAL', A.; VALLENIUS, G.; ZOAR, B.

Antigenic nature of dextran-precipitating proteins, forming spontaneously in normal human serum. Preliminary report. Probl.gemat.i perel.krovi no.8:45-47 '61. (MIRA 14:9)

1. Iz otdeleniya klinicheskoy khimii universitetskogo gospitalya Upsala (Shvetsiya) i TSentral'nogo ordena Lenina instituta gematologii i perelivaniya krovi (dir. - deystvitel'nyy chlen AMN SSSR prof. A.A. B[redacted]asarov). Ministerstva zdravookhraneniya SSSR.
(DEXTRAN) (BLOOD PROTEINS)

GRONWALDT, Karel, Ing. arch.

Arrangement of beds in hospitals with 20, 40, 60 beds. Cesk. nemoc. 22 no.3-4:65-78 My '54.

1. STU, Stavoprojekt, Praha.
(HOSPITALS,
*bed arrangement in small hosp.)

GRONWALDT, Karel

Territorial medical and regional medical centers. Cesk. zdravot. 4 no.11:636-641 Nov 56.

1. Studijni a typisacni ustav v Praze.
(PUBLIC HEALTH,
territorial & regional med. centers in Czech. (Cz))

GRONWALDT, K., inz., arch.; LANGR, V., inz., arch.

Solution of typification plans for basic public buildings in urban and rural areas. Pos stavby 11 no.2:57-61 '63.

1. Studijni a typizacni ustav, Praha.

GRONY, Z.

Cast-iron shells for sleeve bearings. p. 139, Vol. 5, no. 5, May 1955, TECHNIKA MOTORYZACYJNA

SO:MONTHLY LIST OF EAST EUROPEAN ACCESSIONS, (EEAL), LC, Vol. 4, No.9, Sept. 1955, Uncl.

FILATOVA, V.S.; BALAKHONOVA, L.I.; GRONZBERG, Ye.Sh. (Gor'kiy)

Hygienic aspects of vinyl chloride production. Gig. truda i prof. zab. 2 no.1:6-9 Ja-F '58. (MIRA 11:3)

1. Institut gigiyeny truda i profboleznay.
(PLASTIC INDUSTRY--HYGIENIC ASPECTS)
(ETHYLENE--TOXICOLOGY)

GRONSBERG, Ye.Sh.

Determination of benzaldehyde in air. Zav.lab. 24 no.4:421 '58. (MIRA 11:4)

1. Gro'kovskiy nauchno-issledovatel'skiy institut gigiyeny truda i profzabolevaniy.

(Benzaldehyde--Analysis) (Naphthol) (Colorimetry)

GRONZIK, S.S., podpolkovnik meditsinskoy sluzhby

Instruction on sanitation and health education in a military district hospital. Voen.-med. zhur. no.4:68-69 Ap '61. (MIRA 15:6)

(MILITARY HYGIENE)

GRONZIK, S.S.

Method of determining the supporting capacity of the lower extremity. Vop.kur., fizioter. i lech.fiz.kul't. 28. no.2: 170-171 Mr-Ap'63. (MIRA 16:9)
(EXTREMITIES, LOWER) (MEDICAL TESTS)

GRONZIK, S.S.

Method of determining mobility in the talocrural joint. Vop. kur. fizioter. i lech. fiz. kul't. 28 no.3:265-266 My-Je '63. (MIRA 17:5)

1. Iz Tbilisskogo okruzhnogo voyennogo gospitalya (nachal'nik-kand. med. nauk S.I. Starostenko).

GROSLER, S.

"Notes on cotton fustian making", p. 21, (TEXTILE, Vol. 2, no. 7, July 1951, Bucuresti)

SO: Monthly List of East European Accession, Vol. 2, no. 8, Library of Congress, August 1953, Uncl.

GROPPER, S.

From experiences with sericulture in 1955 and some aspects of natural silk production. p. 162.

INDUSTRIA TEXTILA, Vol. 7, No. 4, Apr. 1956, Rumania.

SO: East European Accessions List, L. of C., Vol. 5, No. 10, Oct. 1956.

Grappers.

[illegible]

[illegible] Textiles from thread spun from [illegible]

[illegible] Vol. 7, no. 5, Jan 1956.

[illegible]

[illegible]

[illegible]

So: [illegible] European Accession, Vol. 6, no. 5, Jan 1957

GROPPER, Z.

RUMANIA / Chemical Technology, Chemical Products and Their Application, Part 3. - Fermentation Industry. H

Abs Jour: Ref Zhurnal Khimiya, No 18, 1958 62528.

Author : Z. Gropper.
Inst : Not given.
Title : New Methods of Alcohol Rectification.

Orig Pub: Rev. ind. aliment. prod. vegetale, 1957, No 7, 6 - 7.

Abstract: The methods of rectification of raw alcohol used in Rumania and USSR are discussed taking into consideration the yield indices, the properties of the rectified alcohol, the alcohol losses at distillation and the equipment productivity.

Card 1/1 11

GROPPER, Z.

TECHNOLOGY

Periodical: REVISTA INDUSTRIEI ALIMENTARE. PRODUSE VEGETALE. No. 1, 1958.

GROPPER, Z.; SOLOMON, A. Modern methods for potato storage. p. 14.

Monthly List of East European Accession (EEAI) LC, Vol. 8, no. 3
March 1959 Unclass.

KIMMEL, E.; GROPSIAN, R.; COTOSMAN, A.

Thermoindicator substances with many changes. Studii chim Timisoara 10 no.2:253-257 Jl-D'63.

COCHECI, V.; KIMMEL, E.; PIRVU, I.; TAUBERT, R.; GROPSIAN, R.; SOTOSMAN, A.

Obta'ning copper oxychloride from the ashes of copper pyrites.
Bul St si Tehn Tim 9 no.2:349-354 Jl-D '64.

GROPSIAN, Z.

4

2

Air oxidation of naphthalene with vanadium pentoxide catalyst in gaseous suspension. Z. Gropsian and I. Ennsum. *Acad. rep. populare Romîne* (~~Filiala Iasi, Gradul cercetari~~ *Studii cercetari chim.* 1, No. 1/4, 79-82(1954)(French summary).—The rate of oxidation of C_6H_6 to c-$C_6H_4(CO)_2O$ is almost doubled at 350° when finely dispersed V_2O_5 on silica gel is used instead of the more customary fixed catalysts. G. Gerard

Gropsianu, Z.

RUMANIA/Physical Chemistry - Thermodynamics, Thermochemistry, Equilibria, Physical-Chemical Analysis, Phase Transitions. B-8

Abs Jour: Referat. Zhurnal Khimiya, No 2, 1958, 3773.

Author : Z. Gropsianu, M. Muraresku.
Inst : Academy of Sciences of Rumania, Timiscara Section.
Title : Liquid-Vapor Equilibrium of Dioxane-Benzene and Dioxane-Toluene Mixtures.

Orig Pub: Studii si cercetari stiint. Acad. RPR, Baza Timisoara. Ser. stiinte chim., 1956, 3, No 1-2, 81-86.

Abstract: A simple instrument for the determination of liquid-vapor equilibrium at atmospheric pressure is described; differential distillation by decreasing the vapor and condensate volumes is effectuated in this instrument. The bibliographical data referring to two binary systems with dioxane are completed. The experimental results are represented on graphs t - x and y - x at atmospheric pressure and in tables.

-19-

Card : 1/1

RUMANIA/Physical Chemistry - Solutions, Theory of Acids and Bases. B-11

Abs Jour: Referat. Zhurnal Khimiya, No 2, 1958, 3937.

Author : Z. Gropsianu, M. Muraresku.
Inst : Academy of Sciences of Rumania, Timisoara Section.
Title : Volatility of Aqueous Solutions of Boric Acid.

Orig Pub: Studii si cercetari stiint Acad RPR. Baza Timisoara. Ser. stiinte chim., 1956, 3, No 3-4, 67-73.

Abstract: The volatility of aqueous solutions of boric acid was determined under the general pressure of 750, 600, 450 and 300 mm of mercury column. The results were adjusted using Rau's (sic!) [probably Raoult's law] law. The obtained results indicate that boric acid is little volatile and that its volatility depends directly on the concentration up to the mean content of 25% by weight. Volatility rises little at high concentrations. It is emphasized that the greater results of other authors have been caused by the fact that boric acid volatilize easily at boiling.

-10-

Card : 1/1

C

RUMANIA/Inorganic Chemistry. Complex Compounds.

Abs Jour: Ref Zhur-Khim., No 15, 1958, 49837.

Author : ~~Gropoianu Z., Mu~~rarescu M.
Inst :
Title : Reduction of WO_3 with Hydrogen and Methyl Alcohol.

Orig Pub: Comun. stiint. si tehn., 1956, 1, 85-87.

Abstract: Study of the reducing action of the vapor of pure or admixed with hydrogen CH_3OH, at high temperature, on WO_3. At 600° and a weight ratio of H_2 : CH_3OH = = 1/5, pure WO_2 is obtained. -- From author's summary.

Card : 1/1

GROPSIANU, Z.

5

Liquid-vapor equilibriums at subatmospheric pressures for the systems: benzene-dioxane, dioxane-toluene, ethanol-dioxane, and toluene-butanol. Z. Gropsianu, I. Kyri, and R. Gropsianu. *Acad. rep. populare Romîne, Bază cercetări ştiinţ. Timişoara, Studii cercetări ştiinţ., Ser. ştiinţe chim.* 4, No. 3-4, 73-85(1957).—The data found in the literature were contradictory. Good agreement was found between the exptl. curve log activity coeff. vs. compn. and the curves traced with the aid of van Laar's relation. The dents. were made at the pressures 760, 600, 400, and 200 mm. Hg. I. Herling

GROPSIANU, Z.; TOLGYI, S.

Transitory conditions in the distillation with recirculation of the condensate. Studii chim Timisoara 9 no.1/2:91-95 Ja-Je '62.

GROPSIANU, Z.

The 33d International Congress of Industrial Chemistry; Toulouse-Bordeaux, September 28- October 5, 1961. Studii chim Timisoara 9 no.1/2:181-182 Ja-Je '62.

TOLGYI, S.; GROPSIANU, Z.

On a cyclic system of linear differential equations. Studii chim Timisoara 10 n.1:115-124 Ja-Je '63.

GROPSIANU, Z.; IONESCU, Gh.; MEDELEANU, Minodora

Contributions to the calculation of absorption columns of maleic anhydride in water. Studii chim Timisoara 10 no.2: 203-209 Jl-D'63.

GROPYANOV, M.A., dotsent (Simferopol')

Surgery in cavernoma of the liver. Klin.med. 37 no.11:127-131 N '59. (MIRA 13:3)

1. Iz kliniki gospital'noy khirurgii (zaveduyushchiy - prof. K.S. Keropian) pediatricheskogo fakul'teta Krymskogo meditsinskogo instituta.
(LIVER neoplasms)
(HEMANGIOMA surgery)

GROPYANOV, M.A.

Surgery of acute intestinal obstruction in pregnancy. Khirurgiia 36 no.4:103-104 Ap '60. (MIRA 13:12)
(INTESTINES, OBSTRUCTION) (PREGNANCY, COMPLICATIONS OF)

GROPYANOV, M.A., dotsent

Acute pathological processes in the abdominal organs caused by Meckel's diverticulum. Sov.med. 25 no.1:137-140 Ja '61. (MIRA 14:3)

1. Iz kafedry gospital'noy khirurgii (zav. - prof.K.S.Keropian) pediatricheskogo fakul'teta Krymskogo meditsinskogo instituta (direktor - dotsent S.I.Georgiyevskiy).

(ILEUM--ABNORMITIES AND DEFORMITIES)
(ABDOMEN)

GROPYANOV, M.A., dotsent

Case of perforating wound of the abdominal cavity in pregnancy. Khirurgiia no.11:129-130 '61. (MIRA 14:12)

1. Iz kliniki gospital'noy khirurgii (zav. - prof. K.S. Keropian) pediatricheskogo fakul'teta Krymskogo meditsinskogo instituta.
(PREGNANCY, COMPLICATIONS OF)
(ABDOMEN--WOUNDS AND INJURIES)

GROPYANOV, M. A., dotsent (Simferopol')

Adenoma of the liver (single observation). Klin. med. no.11:135-138 '61. (MIRA 14:12)

1. Iz kliniki gospital'noy khirurgii (zav. - prof. K. S. Keropian) pediatricheskogo fakul'teta Krymskogo meditsinskogo instituta (dir. - dotsent S. I. Georgiyevskiy)

(LIVER—TUMORS)

GROPYANOV, M.A. (Simferopol', ul.Volodarskogo,d.18,kv.6)

Case history of evagination of the intestines through a small intestine fistula. Klin.khir. no.7:78-79 Jl '62. (MIRA 15:9)

1. Klinika gospital'noy khirurgii (zav. - prof. K.S.Keropian) pediatricheskogo fakul'teta Krymskogo meditsinskogo instituta.
(FISTULA) (HERNIA)

L 08447-67 EWP(e)/EWT(m)/EWP(t)/ETI IJP(c) JD/JG/GD/AT/JAJ/WH

ACC NR: AT6027153 (A) SOURCE CODE: UR/0000/65/000/000/0250/0256

AUTHOR: Avgustinik, A. I.; Gropyanov, V. M.; Drozdotskaya, G. V.; Vigdorgauz, V. S.

ORG: none

TITLE: Kinetics of formation and decomposition of solid solutions in refractory carbide systems

SOURCE: AN SSSR. Otdeleniye obshchey i tekhnicheskoy khimii. Issledovaniya v oblasti khimii silikatov i okislov (Studies in the field of chemistry of silicates and oxides). Moscow, Izd-vo Nauka, 1965, 250-256

TOPIC TAGS: solid solution, decomposition, zirconium carbide, niobium compound, zirconium compound

ABSTRACT: The formation of solid solutions in ZrC-NbC and TiC-NbC systems was studied as a function of temperature and duration of the synthesis process. The products were analyzed by x-ray, metallographic and chemical methods. In both systems, the matrix of the solid solution is NbC, whose lattice can increase in volume without breaking its chemical bonds. As the holding time increases, a gradual decomposition of the solid solutions takes place. Concentration-time curves for solid solutions at various synthesis temperatures showed that the formation of solid solutions is faster and their decomposition slower the higher has been the synthesis temperature. The data obtained permit one to calculate the time required for the maximum solubility of TiC

Card 1/2

L 08447-67

ACC NR: AT6027153

and ZrC in NbC to be reached. The observed decomposition of the solid solutions in the ZrC-NbC systems leads to the conclusion that a two-phase region exists in their phase diagrams at below-solidus temperatures. Orig. art. has: 5 figures and 3 tables.

SUB CODE: 07/ SUBM DATE: 04Jul64/ ORIG REF: 013/ OTH REF: 001

L 01224-67 EWP(e)/EWT(m)/EWP(t)/ETI IJP(c) JD/WW/JG/WH

ACC NR: AP6032944 SOURCE CODE: UR/0131/66/000/010/0050/0055

76

AUTHOR: Gropyanov, V. M.; Yudin, B. F.; Avgustinik, A. I.

ORG: All-Union Institute of Refractories (Vsesoyuznyy institut ogneuporov)

B

TITLE: High-temperature reactions in the TiC-ZrO_2 system

SOURCE: Ogneupory, no. 10, 1966, 50-55

TOPIC TAGS: refractory compound, titanium carbide, zirconia, high temperature research, solid state, reaction mechanism

ABSTRACT: Solid-state chemical reactions in the TiC—ZrO_2 system have been studied within the 1700—2400 K range in vacuum. Correlation of experimental data with thermodynamic analysis data indicated that only three reactions occur in the system within the temperature range studied. The direction of the chemical process and predominance of one or another of the three reactions depend on temperature, gaseous atmosphere composition, and the ratio of components in the starting mixture. Orig. art. has: 4 figures, 3 tables, and 13 equations. [JK]

SUB CODE: 11/ SUBM DATE: none/ ORIG REF: 006/ OTH REF: 001/ ATD PRESS: 5096

Card 1/1 egk UDC: 666.76.001.5

L 08404-67 EWT(m)/EWP(e)/EWP(t)/ETI LJP(c) JD/WW/AT/AW/AS/WH/AM SOURCE CODE: UR/0000/65/000/000/0257/0264
ACC NR: AT6027154 (A)

AUTHOR: Avgustinik, A. I.; Vigdergauz, V. S.; Gandol'man, I. L.; Gorfunkel', L. V.; Gropyanov, V. M.; Drozdetskaya, G. V.

ORG: none

TITLE: Use of a cermet made of tungston and aluminum oxide in the preparation of cathodic heaters of electron tubes

SOURCE: AN SSSR. Otdeleniye obshchey i tekhnicheskoy khimii. Issledovaniya v oblasti khimii silikatov i okislov (Studies in the field of chemistry of silicates and oxides). Moscow, Izd-vo Nauka, 1965, 257-264

TOPIC TAGS: high temperature cermet material, tungston, aluminum oxide

ABSTRACT: The aims of the study included (1) the selection of $W-Al_2O_3$ cermet compositions suitable for the preparation of cathodic heaters, (2) a study of their physical properties (resistivity as a function of temperature, emissivity, strength, porosity, etc.) as functions of the composition and processing. The influence of the regularity of distribution of the metal (tungston) and oxide ($\alpha-Al_2O_3$) particles and degree of dispersion of the starting materials on the properties of the sintered cermets was determined. The sintering was found to worsen with rising tungston content: the shrinkage and relative density decrease, and the porosity increases. The mechanical and elastic properties are determined by the porosity. The optimum combination of

Card 1/2

L 08404-67
ACC NR: AT6027154

proportion corresponds to a cermet composition containing 50-75% W and 50-30% Al_2O_3, and this composition is recommended for applications in industry after final improvements in the process of its preparation are made. Orig. art. has: 5 figures, 5 tables and 1 formula.

SUB CODE: 11/ SUBM DATE: 08Feb65/ ORIG REF: 005/ OTH REF: 002

Card 2/2

S/081/60/000/013(I)/014/014
A006/A001

Translation from: Referativnyy zhurnal, Khimiya, 1960, No. 13 (I), p. 449, # 53465

AUTHORS: Avgustinik, A. I., Gropyanov, V. M., Ordan'yan, S. S.

TITLE: Manufacture of Disks on Cermet Bonding for the Dressing of Abrasive Tools

PERIODICAL: Tr. Leningr. tekhnol. in-ta im. Lensoveta, 1959, No. 57, pp. 103-104

TEXT: Disks for the straightening of abrasive tools are made on brass bonding and have a series of deficiencies. The authors studied the effect of the composition of the ZrO_2 base cermet bonding on the strength and quality of WC disks. An X-ray analysis did not reveal any structural changes in WC grains after roasting. Zones with a higher content of metal from the cermet bonding formed around the WC grains; this promoted the strong fixing of these grains in the bonding. After roasting at 1,700°C, cracks were detected on the lateral surfaces of the disks and the hardness of grains on the surface was somewhat reduced. Apparently, the changes in the hardness of the grains were connected

Card 1/2

S/081/60/000/013(I)/014/014
A006/A001

Manufacture of Disks on Cermet Bonding for the Dressing of Abrasive Tools

with the diffusion of the bonding metal in WC. Better results were obtained by reducing the roasting temperature.

V. Autko

Translator's note: This is the full translation of the original Russian abstract.

Card 2/2

83495
S/081/60/000/013(I)/013/014
A006/A001

18.6200

Translation from: Referativnyy zhurnal, Khimiya, 1960, No. 13 (I), p. 448, # 53453

AUTHORS: Avgustinik, A. I., Popova, I. A., Gropyanov, V. M.

TITLE: Manufacture of Cermet Protective Jackets for Thermocouples by the Method of Plastic Forming, Broaching and Casting

PERIODICAL: Tr. Leningr. tekhnol. in-ta im. Lensoveta, 1959, No. 57, pp. 105-106

TEXT: Jackets for plunging thermocouples made of molten quartz break down when used once for plunging into steel. Results are given of the manufacture of ZrO_2-base cermet jackets produced by the method of forming from a moist substance, by broaching through a nozzle with a plasticizing additive (5% solution of polyvinyl alcohol) and by casting. The service life of the jackets when plunged into molten steel (up to 1,800°C) was up to 11 thermal changes for plastic formed jackets, up to 10 thermal changes for those formed by broaching and up to 8 heat changes for cast formed jackets.

V. Autko

Translator's note: This is the full translation of the original Russian abstract.

Card 1/1

AVGUSTINIK, A. I.; POPOVA, I. A.; GROPYANOV, V. M.

Manufacturing cermet jackets for immersion thermocouples by the use of hydrostatic pressing. Trudy LTI no.57:107-108 '59. (MIRA 13:8)

(Thermocouples) (Ceramic metals)

ACCESSION NR: AP4005835 S/0226/63/000/006/0011/0017

AUTHOR: Avgustinik, A. I.; Vigdergauz, V. Sh.; Gropyanov, V. M.; Drozdetskaya, G. V.

TITLE: Effect of powder fineness on the density of niobium carbide parts at various sintering temperatures

SOURCE: Poroshkovaya metallurgiya, no. 6, 1963, 11-17

TOPIC TAGS: niobium carbide, sintered niobium carbide, niobium carbide powder, niobium carbide sintering, niobium carbide density, sintering, powder metallurgy, density

ABSTRACT: Niobium carbide sinters poorly due to its high melting point (3750 K), leading to lower microhardness. The present authors therefore studied the relationship between particle size, sintering temperature, density and heat resistance of NbC and attempted to find methods for producing niobium carbide powder with a relative density not lower than 90% of the theoretical value at low sintering temperatures. This is very important for creating heat resistant structures. Pulverization in vibro-mills was used to obtain fine particles of niobium carbide, thus increasing the surface energy prior to cold pressing. Fig. 1 in the Enclosure shows the effect of the sintering temperature on the specific gravity of niobium carbide

ACCESSION NR: AP4005835

with varying initial specific surface area. This test was performed on the Deryagin device. As seen from the graph in Fig. 2 of the Enclosure, greater dispersion of the powder leads to higher density at lower temperatures. Two formulas are proposed by the authors for relating the sintering temperature and fineness of the carbide powder. Experimental data and the theoretical values obtained from these formulas differed by not over 1-1.5%. Tests performed by the authors also corroborated the phenomenologic theory mentioned in articles by M. S. Koval'chenko, G. V. Samsonov and V. V. Skorokhod. It was found that a relative density of niobium carbide powder of up to 97% can only be obtained with very fine powder and sintering temperatures $\leqslant$ 0.6 m.p. On the basis of experimental data, the lattice destruction energy for NbC is calculated to be approximately 410 k-j/mol. Orig. art. has: 7 figures, 4 tables and 9 equations.

ASSOCIATION: Leningradskiy Tekhnologicheskiy Institut im. Lensoveta (Leningrad Technological Institute)

SUBMITTED: 19Nov62	DATE ACQ: 20Jan64	ENCL: 02
SUB CODE: MM	NO REF SOV: 009	OTHER: 000

Card 2/4

ACCESSION NR: AP4005835

ENCLOSURE: 01

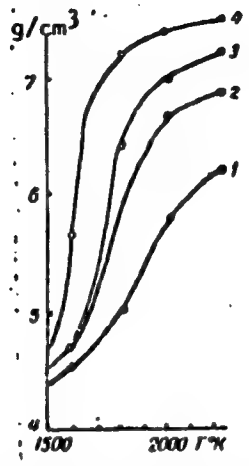

Fig. 1. Density of NbC in relation to the sintering temperature: 1 - 1.56; 2 - 4.1; 3 - 6.2; 4 - 12.5

Card 3/4

ACCESSION NR: AP4005835

ENCLOSURE: 02

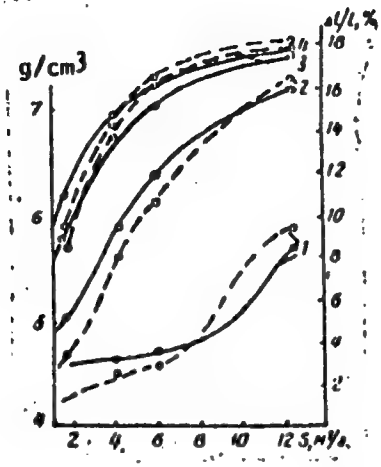

Fig. 2. Density (solid line) and contraction (dash line) of NbC in relation to the specific surface area of the sintered powder. Sintering temperature: 1 - 2240±20K; 2 - 2020±20K; 3 - 1820±20K; 4 - 1590±15K

Card 4/4

L 20496-65 EPF(c)/EPF(n)-2/EPR/EWG(j)/EPA(s)-2/EPA(w)-2/EWT(m)/EWP(b)/T/EWP(e)/EWP(t) Pr-4/Ps-4/Pt-10/Pu-4/Pab-10 ASD(m)-3/AS(mp)-2/IJP(c) AT/WH/WW/JD/JG

ACCESSION NR: AP5001303 S/0131/64/000/012/0570/0575

AUTHOR: Avgustinik, A. I.; Gropyanov, V. M.; Drozdetskaya, G. V.; Vigdergauz, V. Sh.

TITLE: Interaction of certain refractory carbides with zirconium dioxide

SOURCE: Ogneupory, no. 12, 1964, 570-575

TOPIC TAGS: refractory carbide, refractory oxide, zirconium carbide, titanium carbide, zirconium dioxide, high temperature refractory, cermet component, refractory ceramic, niobium carbide

ABSTRACT: Physical, mechanical, and electric properties and the crystal lattice structure of the refractory sintered mixtures of zirconium dioxide with zirconium, titanium, or niobium carbides have been investigated. The investigation follows up a series of publications on interaction between refractory carbides and oxides. The importance of the subject was stressed for high-temperature applications. Compacted samples of the carbide-zirconium dioxide mixtures containing 5—95% of each component were vacuum sintered at 2300—2400C. Pure

Card 1/3

L 20498-65
ACCESSION NR: AP5001303

2

zirconia, either unstabilized (monoclinic) or stablized by fusion or by the addition of CaO, was used as starting material. Measurements of the physical and mechanical characteristics of the sintered samples and the kinetics of the changes in combined carbon content of the mixtures at various temperatures during the sintering indicated that $ZrC-ZrO_2$ "cermets" are the most stable of the materials investigated at high temperature. X-ray investigation of the lattice parameters showed the effect of ZrO_2 content and form in the samples. Lattice parameters of the carbide component decrease with increasing ZrO_2 concentration; this decrease is most pronounced for the ZrO_2 stabilized by fusion, and least pronounced for the monoclinic ZrO_2. The pattern of the changes in lattice parameters confirmed the stability of the $ZrC-ZrO_2$ and $TiC-ZrO_2$ "cermets" at sufficiently high temperature. Micrographs of the sintered samples produced the evidence of the existence of a third phase which was metallic. The properties of $ZrC-ZrO_2$ and $TiC-ZrO_2$ "cermets" make them potential construction materials for high-temperature use. Orig. art. has: 4 figures and 5 tables.

Card 2/3

L 20498-65
ACCESSION NR: AP5001303

ASSOCIATION: Leningradskiy tekhnologicheskiy intitut im. Lensoveta (Leningrad Technological Institute)

SUBMITTED: 00 ENCL: 00 SUB CODE: MT

NO REF SOV: 003 OTHER: 006 ATD PRESS: 3162

Card 3/3

GROPYANOV, Ye.A.; SITKOVSKIY, N.B.

Perforation of peptic ulcer in association with hemorrhage.
Vrach. delo no.8:124-125 Ag '61. (MIRA 15:3)

1. Khirurgicheskoye otdeleniye Stavishchanskoy rayonnoy bol'nitsy Kiyevskoy oblasti.
(STOMACH--ULCERS)
(HEMORRHAGE)

SITKOVSKIY, N.B.; GROMYANOV, Ye.A.

Two observations of pathology in Meckel's diverticulum in children. Nov. khir.arkh. no.4:80 '62. (MIRA 15:5)

1. Stavishchenskaya rayonnaya bol'nitsa Kiyevskoy oblasti.
(ILEUM--DISEASES)

GROS, Anton (Maribor)

Some welding reclamations of heavy thick-walled structural parts of gray cast iron and cast steel. Var tehn 10 no.3:73-78 '61.

1. Vodja sekcije Zavoda za varjenje LRS, Maribor; odbornik, Drustvo za varilno tehniko LRS.

(Welding)

RUMANIA/Human and Animal Physiology (Normal and Pathological). Climate. T-13

Abs Jour : Ref Zhur - Biol., No 16, 1958, 75314

Author : Cupcea, S., Deleanu, M., Frits, T., Gros. E.
Inst : -
Title : Effect of Ionized Air on Adrenalectomized Animals. 1. Duration of Survival Period of Rats.

Orig Pub : Comun. Acad. RPR, 1957, 7, No 1, 143-149

Abstract : No abstract.

Card 1/1

SURNAME (in caps); Given Names

Country: Yugoslavia

Academic Degrees: [not given]

Affiliation: Surgical Clinic of the Medical Faculty (Kirurgicna Klinika Medicinske Fakultete), Ljubljana; Director (Predstojnik): Prof Dr Bozidar Lavric

Source: Ljubljana, Zdravstveni Vestnik, Vol XXX, No 1-2, 1961, pp 16-17

Data: "The Causes of Deviation in Activity Estimation of Diastase by Somogyi's Method."

Authors:

ZAKELJ, Alenka
GROS, Marijan

STRNAD, J.; HRIBAR, M.; GROS, M.

How much physics do the students of the Mathematical and Physical Department know in the first year. Obz mat fiz 11 no.4:190-191 D '64.

"Some advice on the installation of conductors for transmission lines."
Elektrotehniski Vestnik, Ljubljana, Vol 22, No 1/2, 1954, p. 27

SO: Eastern European Accessions List, Vol 3, No 10, Oct 1954, Lib. of Congress

ACC NR: AP6029167 SOURCE CODE: RU/0003/66/017/002/0078/0080

AUTHOR: Popa, O.; Gros, I.; Knall, H.

ORG: none

TITLE: Some characteristics of styrene-divinylbenzene copolymers and cationites of the Vionit CS-2 type with various degrees of cross-linking

SOURCE: Revista de chimie, v. 17, no. 2, 1966, 78-80

TOPIC TAGS: copolymer, styrene, vinyl compound, polymer cross linking

ABSTRACT: A report on the relation of various properties of styrene-divinylbenzene copolymers and CS-2 Vionit type cationites to the divinylbenzene content. Variation of swelling coefficient with degree of cross-linking, and effect of changes in temperature, particle size, solvent, etc. were determined experimentally, and the divinyl-benzene content was expressed as a function of the corresponding swelling coefficient. Orig. art. has: 4 figures and 2 tables. [JPRS: 36,556]

SUB CODE: 07 / SUBM DATE: none / ORIG REF: 001 / SOV REF: 004
OTH REF: 014

Card 1/1 UDC: 661.183.123.2:678.746.22-13:678.762-13

GROS, Ozbalt, dipl. el. inz. (Ljubljana)

Economic price of electric power from the viewpoint of securing means for extended reproduction, and deviation f this price from today's rates. Energija Hrv 13 no. 1/2:27-34 '64.

1. Research Engineer, Electric Institute, Ljubljana, Hajdrihova ul. 2.

GROSAN, Al.

Through the fulfillment of the Rumanian Technical Plan. Munca sindic 6 no.12:17-19 D '62.

1. Presedinte al comitetului sindicatului Uzinelor de vagoane, Arad.

[illegible], Gh., [illegible], L.N., [illegible], I.

Permission systems applied to rigid bodies in rotation
Bul St si Tehn Tim 9 no.1 [illegible]

GROSANU, I.; IANULESCU, M.; VIRAG, I.

Calculating the stress of a reinforced concrete pile driven into the ground by vibropercussions. Bul St si Tehn Inst 9 no.2:313-320 Jl-D '64.

SILAS, Gh.; PAUNESCU, M.; GROSANU, I.; BRINDEU, L.; GLIGOR, T.

Vibropercussor for driving elements into the ground. Bul St si Tech Tim 9 no.2:321-329 Jl-D '64.

GROSARU, Gheorghe; CHIRILA, Ion; DOGARU, Oprea; GANEA, Nicolae

Telegram from builders of the Site of the Chemical Fertilizer Concern, Turnu Magurele, to Comrade Gheorghe Gheorghiu-Dej, Central Committee of the Rumanian Workers' Party, on the occasion of finishing the work of construction-assembling at the Sulfuric Acid Plant. Constr Buc no.756:1 4 July '64.

1. Secretary of the Party Committee (for Grosaru).

GROS-TOPOR, B.P.; KONONOVA, B.S.

Effectiveness of treatment of pulmonary tuberculosis in children and adolescents in the "Dubesar'" sanatorium. Zdravookhranenie 3 no.3:39-42 My-Je '60. (MIRA 13:7)

1. Iz detskogo tuberkuleznogo sanatoriya "Dubesar'" (glavnyy vrach B.P. Gros-Topor) i Respublikanskogo protivotuberkuleznogo dispansera (glavnyy vrach L.D. Sigal).
(TUBERCULOSIS)

GROSBERG, A.

Vegetable Gardening

Vegetable gardening on collective farms near cities.
Kolkh. proizv. 12 No. 9, 1952

9. Monthly List of Russian Accessions, Library of Congress, December 1953, Uncl.

GROSBERG, G.G., dotsent

Ways of improving cutter performance in oil shale mines. Zap.Len. gor.inst.32 no.1:124-130 '54. (MLRA 9:1)
(Mining machinery) (Oil shales)

GROSBERG, P.

219 Ekskavator--505 Riga, Latgosizdat, 1954. 95 S. S Ill. 20 SM. 2,000 EKZ. 1r. 10K. Na Latysh. Yaz (54-54811) 621.879.22.

SO: Knizhnaya, Letopis, Vol. 1, 1955

GROSBERG, YU. I.

Pro Liniyni Funktsionali v prostori funktsiy obmezhenoi variatsii.
Kiyev, Uchen. Zap. Fed. IN-TA, 2(1939), 17-25.

SO: Mathematics in the USSR, 1917-1947
edited by Kurosh, A.G.,
Markushevich, A.I.,
Rashevskiy, P.K.
Moscow-Leningrad, 1948

GROSBERG, Yu. I.

*Levin, V. I., i Grosberg, Yu. I. Differencial'nye uravnenlya matematiceskoi fiziki. [Differential Equations of Mathematical Physics]. Gosudarstv. Izdat. Tehn-Teor. Lit., Moscow-Leningrad, 1951. 575 pp.

A text-book intended for engineering students. The chapter headings are as follows. I. Statement of several fundamental problems of mathematical physics. II. Theory of the potential. III. The wave equation in an unbounded region; the method of characteristics. IV. Problems in characteristic functions. V. Solution of problems of mathematical physics by the method of characteristic functions. Appendix: Fundamental facts from the theory of cylinder functions.

Source: Mathematical Reviews, Vol 13 No.

USSR/Mathematics - Approximation 21 Jul 52

"Application of the Galerkin Method to Problems With Nonhomogeneous Boundary Conditions," Yu. I. Grosberg

"Dok Ak Nauk SSSR" Vol 85, No 3, pp 473-476

Shows that in the case of elliptic eqs with boundary conditons of the 2d and 3d kind coordinate functions can be selected independently of boundary conditions and that the Galerkin method can be applied also to the soln of problems with nonhomogeneous boundary conditions. B. G. Galerkin's method was used by its author to solve boundary

235T68

problems with homogeneous boundary conditions and to det the eigenvalues of such problems. Submitted by Acad M. V. Keldysh 22 May 52.

235T68

GROSBERG, Yu. I.

GROSBERG, Yu.I.; OVCHINSKIY, B.V.

"Fundamentals of computer mathematics" by B.P.Demidovich, I.A.Maron. Usp. mat. nauk 18 no.2:253-257 Mr-Ap '63. (MIRA 16:8)
(Mathematics) (Programming (Electronic computers))
(Demidovich, B.P.) (Maron, I.A.)

GROSBLAT, R.Sh., kand. biologicheskikh nauk (Mukachevo)

Function of the thyroid gland in pregnancy according to data on the content of protein-bound iodine in the blood plasma. Probl. endok. i gorm. 9 no.3:95-102 My-Je '63. (MIRA 17:1)

1. Iz Zakarpatskogo nauchno-issledovatel'skogo instituta okhrany materinstva i detstva (dir. - kand. med. nauk Ya.V. Stovbunenko-Zaychenko).

GROSBLAT, R. SH.

Chemical Abst.
Vol. 48
Apr. 10, 1954
Biological Chemistry

(5)

Characteristics of saltlike compounds of deoxyribonucleic acid with proteins. O. P. Chepinoga and R. Sh. Grosblat (Inst. Biochem., Acad. Sci. Ukr. R. S. R., Kiev). *Ukrain. Biokhim. Zhur.* 21, 121–38 (in Russian, 138–40)(1949).—A protein soln. of fixed concn. (0.5 ml.) was added to 1 ml. of a soln. of deoxyribonucleic acid (DNA) or of its Na salt (DNNa), resp. The excess of protein was removed with picric acid. A certain percentage of the protein enters in a saltlike combination with DNA. The proteins investigated were egg albumin, histone, fibrinogen, casein, dephosphorylated casein, myosin fractions, myogen B, and actin. The animal proteins were obtained from dog and rabbit tissues, from kidneys, liver, and spleen. The percentage of combined DNA or DNNa is greatly influenced by the pH and the amts. of NaCl, NH_4Cl, Na_2HPO_4, or KCl present. It is also of importance whether the protein is undenatured or denatured, and here too there is a difference whether denaturation was brought about by heat or by an excess of drug. This reaction is deemed significant because it is believed that the action of viruses may proceed in a similar way. The presence of adenosinetriphosphate, adenylic acid, and of the Carty depolymerizate (Avery, *et al.*, *C.A.* 38, 1541[1]) gives rise to a competitive inhibition of the reaction. W. J.

CHEPYNOGA, O.P.; GROSBLAT, R.Sh.

Roel of depolymerized enzymes for the processes of malignant growth. Ukr. biokhim.zhur. 24 no.4:420-433 '52. (MLRA 6:11)

1. Instytut biokhimiyi Akademiyi nauk Ukrayins'koyi RSR, Kyyiv.
(Enzymes) (Cancer) (Protein metabolism)

GROSBLAT, R. Sh. Cand Biol Sci -- (diss) "Data on phosphorous exchange ~~during~~ in osteo~~articular~~vascular tuberculosis." Mukachevo, 1955. 13 pp including cover, 19 cm. (Kiev State Order of Labor Red Banner Med Inst im Academician A. A. Bogomolets), 200 copies (KL, 24-57, 116)

GROSBLAT, R. Sh.

2

Med

The effect of tuberculosis of bone joints on the composition of the phosphorus compounds of muscle, blood, and bone of rabbits. R. Sh. Grosblat and B. S. Kutsenok (Transcarpathian Sci. Research Inst., Protection Mother and Child, Mukachevo). *Ukrain. Biokhim. Zhur.* 28, 459-63(Russian summary, 464)(1956).—The bone joints of rabbits were infected with a tuberculosis culture. The inflammatory processes in the bones and in the joints appear 1.5-2 months after the inoculation. In the development of the tuberculous bone processes the following chem. changes occurred in the compn. of the neighboring skeletal muscles: the P of the adenosinetriphosphate was reduced by 21-13%, creatine was reduced by 29-39%, inorg. P was increased on an av. of 25-55%; inorg. P appeared in the blood to a greater extent and the alk. phosphatase activity increased. The latter was also increased in the bone tissue of infected rabbits. Histologic studies confirmed the macro-observations.

B. S. Levine

On the Convergence of the Method of Nets for the Solution of Dirichlet's Problem of Heat Conduction

2

1-RW

Groschaftová, Zdenka. Über die Konvergenz der Netzmethode für die Lösung des Dirichletschen Problems und der Wärmeleitungsgleichung. Apl. Mat. 2 (1957), 342–360. (Czech. Russian and German summaries)

Es handelt sich um numerische Behandlungsmethoden zur Lösung der partiellen Differentialgleichungen 16

$$\frac{\partial^2 u}{\partial x^2}+\frac{\partial^2 u}{\partial y^2}=0 \text{ bzw. } \frac{\partial^2 u}{\partial x^2}=\frac{\partial u}{\partial t}$$

mit den Randbedingungen

$$\left.\begin{array}{l} u(0,y)=\varphi_1(y)\\ u(x,0)=F_1(x)\\ u(a,y)=\varphi_2(y)\\ u(x,b)=F_2(x)\end{array}\right\} \text{ bzw. } \left\{\begin{array}{l} u(x,0)=f(x)\\ f(0)=f(a)=0\\ u(0,t)=0\\ u(a,t)=0\end{array}\right.$$

für $0\leq x\leq a$, $0\leq y\leq b$ bzw. $0\leq x\leq a$, $0\leq t\leq\infty$. Die Verfasserin gewinnt hinreichende Bedingungen für die maximale Schnelligkeit der Konvergenz der sogenannten Netzmethoden. Ist h die Größe der gewählten Netzmasche und sind im Falle des Dirichletschen Problems der Laplaceschen Gleichung die Randfunktionen in allen Ecken des Rechtecks stetig, so gilt: im vorgegebenen Rechteck konvergiert die Netzlösung der Laplaceschen Gleichung gegen die genaue Lösung genau so wie h^2, wenn die erster

11

1/2

Grosatinatova, Zdenka.

Ableitungen der Randfunktionen eine beschränkte Schwankung haben. Diese Konvergenz ist auf dem geschlossenen Rechteck gleichmäßig, wenn die zweiten Ableitungen der Randfunktionen eine beschränkte Schwankung haben. Im Falle der Wärmeleitungsgleichung gesellt sich zum räumlichen Intervall h der Netzmethode das Zeitintervall τ ($\tau/h^2=\beta$). Dann gilt: für alle festen t, $0<t<\infty$ konvergiert die Netzlösung gegen die genaue Lösung genau so wie h^2 unter der Voraussetzung, daß die erste Ableitung der Anfangsfunktion eine beschränkte Schwankung hat. Sie konvergiert wie h^4 unter der Bedingung, daß die dritte Ableitung dieser Funktion eine beschränkte Schwankung hat und $\beta=1/6$ ist. Wenn die zweite Ableitung der Anfangsfunktion eine beschränkte Schwankung hat, konvergiert die Netzlösung gegen die genaue Lösung gleichmäßig für alle t, $0\leq t\leq T<\infty$, wie h^2. Wenn die vierte Ableitung dieser Funktion eine beschränkte Schwankung hat, $\beta=1/6$ ist und die zweite Ableitung der Anfangsfunktion in ihren beiden Endpunkten verschwindet, ist die Konvergenz von der Ordnung h^4.

M. Pinl (Köln)

2

mai

2/2

[illegible]

[illegible]
(R.DIO.RAIK, [illegible], [illegible], Dec. [illegible], [illegible])

SO: Monthly List of East European Accessions, ([illegible]), [illegible], [illegible], [illegible], Uncl.

84-8-27/36

AUTHOR: Grosetskiy, V., Chief Engineer of Sasovo School

TITLE: Some Defects of the Yak-12M aircraft (O nekotorykh nedostatkakh Yak-12M)

PERIODICAL: Grazhdanskaya Aviatsiya, 1957, Nr 8, p. 36 (USSR)

ABSTRACT: The letter to the Editor reports on the defects in the design of certain parts of the Yak-12M as defined at a conference of pilots and engineers of the Sasovo Flying School. Frequent breakage of the rear ski, leakage of the covers of fuel and oil strainers, interference of the braking handle with the PU-7, and escape of alcohol from the windshield wiper in flight are the defects mentioned.

AVAILABLE: Library of Congress

Card 1/1

EYDEL'NANT, L.B., inzh.; TIKHOMIROV, M.Ye., starshiy inzh.-metodist, otv. za vypusk; GROSFATER, B.B., red.

[Equipment for the petrochemical industry and oil and gas refineries; program and tests for correspondence technical school courses "Installation and maintenance of industrial equipment"] Metodicheskii kabinet. Oborudovanie predpriiatii neftegazopererabatyvaiushchei i neftekhimicheskoi promyshlennosti; programma i kontrol'nye raboty dlia zaochnogo obucheniii po spetsial'nosti tekhnikumov "Montazh i remont promyshlennogo oborudovaniia." Moskva, 1959. 14 p. (MIRA 15:2)

1. Russia (1917- R.S.F.S.R.) Ministerstvo stroitel'stva. Upravleniye kadrov. Metodicheskiy kabinet.
(Petroleum refineries--Equipment and supplies)
(Chemicals industry--Equipment and supplies)

GROSFELD, Ludwik DECEASED

See ILC

GROSFELDOWA, Olga

Sucking habits as an etiologic factor in malocclusion according to the Pavlovian theory on conditioned reflexes. Czasopismo stomat. 7 no.5:221-244 My '54.

1. Z Kliniki Ortopedycznej Akademii Medycznej w Warszawie. Kierownik: doc. dr A.Orlik-Grzybowska.

(INFANT,
*sucking habits in etiol. of malocclusion)
(MALOCCLUSION, etiology and pathogenesis,
*sucking habits)

GROSFEL'DOVA, O.(Pol'sha)

Orthodontic therapy of deciduous teeth. Stomatologiia no.4:57-60 Jl-Ag '55. (MLRA 8:10)

1. Iz Ortodonticheskoy kliniki pri Varshavskoy meditsinskoy akademii.
(ORTHODONTICS,
orthondontic management of deciduous teeth)
(TEETH, DECIDUOUS,
orthodontic management)

GROSFELDOWA, Olga

Remarks on the article by I.S. Khurgina in Stomatologiia 1954/5
Czas.stomat. 8 no.5:205-209 May '55.

1. Z Kliniki Ortodoncji A.M. w Warszawie. Kierownik: doc.dr.
A. Orlik-Grzybowska.
(MALOCCLUSION
prev. & ther.indic)

GROSFELDOWA, Olga

Conservative orthodontic treatment in cases of arthropathy of the temporomandibular joint in the early developmental phases. Czas. stomat. 18 no.5:477-481 My'65.

1. Z Kliniki Ortodontycznej Akademii Medycznej w Warszawie (Kierownik: prof. dr. A. Orlik-Grzybowska).

COUNTRY : CZECHOSLOVAKIA

CATEGORY :

AUTHOR :

GROSGEIM, V.A.

Geological development of the northwestern Caucasus in the upper Cretaceous epoch. Izv.vys.ucheb.zav.;geol.i razv. 4 no.10:9-21 O '61. (MIRA 14:12)

1. Vsesoyuznyy nauchno-issledovatel'skiy neftyanoy geologorazvedochnyy institut.
(Caucasus, Northern--Geology)

GROSGEYM, V.A.; KOROTKOVA, K.F.

Structure of the rhythms of stratification (multilayer) in flysch. Izv.vys.ucheb.zav.; geol.i razv. 4 no.2:3-19 F '61. (MIRA 14:6)

1. Vsesoyuznyy nauchno-issledovatel'skiy neftyanoy geologorazvedochnyy institut.

(Flysch) (Geology, Stratigraphic)

PROKOP'YEV, V., mekhanik (Bryansk); MALYSH, V., inzh. (Zaporozh'ye); TANEVSKIY, Ya., inzh. (Arkhangel'sk); GROSH, K. (Chelyabinsk); POPKOVA, Ye. (Chelyabinsk)

Suggested, created, introduced. Izobr.i rats. no.2:20-21 F '62. (MIRA 15:3)

(Technological innovations)

G[illegible], I. A. [illegible].

Excavating Machinery

Increasing the productivity of excavators. Mekh. stroi. 10 No. 2, 1953.

9. Monthly List of Russian Accessions, Library of Congress, June 1953. Unclassified.

GROSH, K.A., inzhener.

Improving the use of the SM-40 molding machine. Sbor.mat. o nov.tekh. v stroi. 15 no.7:13-14 Jl '53. (MLRA 6:7)

(Building machinery)